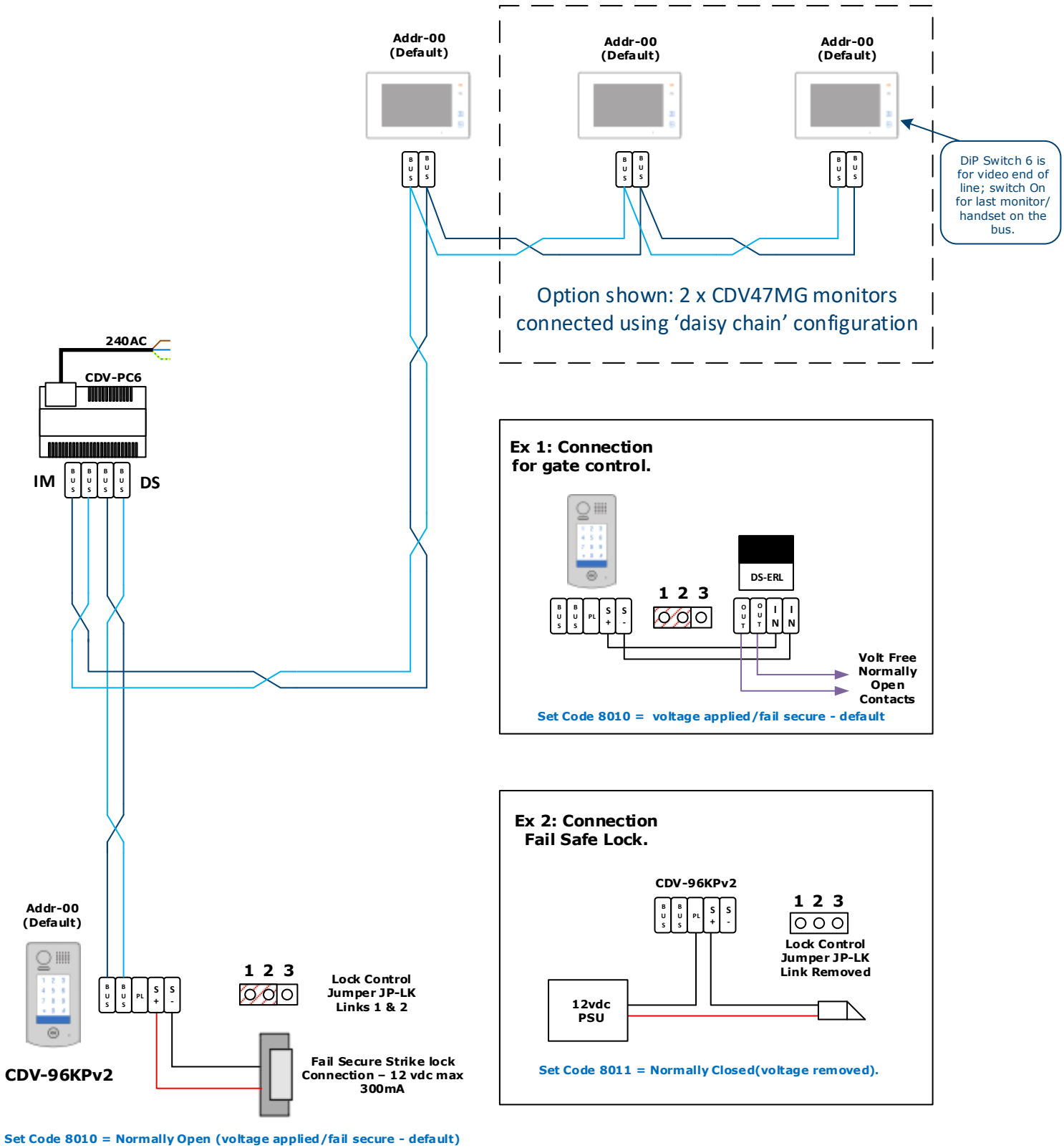

Note: The lock output mode can be changed at the monitor (CDV-47MGv2) or at the Door Panel (CDV96v2), please see the appropriate manual included with the individual product.